StairMaster StepMill®

Technical Manual

Last revised 10/5/15

Important Safety Information

The following pages are intended to educate service technicians on the basic maintenance and service actions for the StairMaster StepMills®. By following the enclosed instructions and maintenance schedule, you will extend the life of your equipment and help ensure it will withstand hours of use in your home/facility.

Before working on this equipment, pay attention to the following warnings:

- Read and understand the complete Owner's Manual.
- Keep Owner's Manual for future reference.
- Read and understand all warnings on this machine. If at any time the Warning stickers become loose, unreadable or dislodged, contact Customer Service for replacement stickers.
- Keep children away from this machine. Monitor them closely when near the machine. Parts that move and appear dangerous to adults can appear safe to children.
- Consult a physician before you start an exercise program. Stop exercising if you feel pain or tightness in your chest, become short of breath, or feel faint. Contact your doctor before you use the machine again. Use the values calculated or measured by the machine's computer for reference purposes only.
- Before each use, examine this machine for loose parts or signs of wear. Do not use if found in this condition. Pay special attention to the steps. Contact Customer Service for repair information.
- Maximum user weight limit: 350lbs. (159kgs). Do not use if you are over this weight.
- Do not wear loose clothing or jewelry. This machine contains moving parts.
- Set up and operate this machine on a solid, level, horizontal surface.
- Do not step off the machine until the Steps have fully stopped.
- Do not operate this machine outdoors or in moist or wet locations.
- Keep at least 19.7"(0.5m) on each side of the machine clear. This is the recommended safe distance for access and passage around and emergency dismounts from the machine. Keep third parties out of this space when machine is in use.
- Do not over exert yourself during exercise. Operate the machine in the manner described in this manual.
- When the machine is put in a studio or club environment, it can only be used in areas where access and control of the machine is managed by approved staff. The degree of management depends on the user's ability to recognize and prevent danger to third parties during the exercise movement.

To decrease risk of burns, fire, electric shock, or injury to persons:

- An appliance must not be left unattended when plugged in. Unplug from outlet when not in operation and before you put on or remove parts.
- Close supervision is necessary when this appliance is used by or near children or disabled persons.
- Use this appliance only for its intended use as described in this manual. Do not use attachments that are not recommended by the manufacturer.
- Do not operate this appliance if it has a damaged cord or plug, if it is not working correctly, if it has been dropped or damaged, or fallen into water. Return the appliance to a service center for examination and repair.
- Keep the cord away from heated surfaces.
- Do not drop or put any object into any opening.
- Do not use outdoors.
- To disconnect, turn all controls to the off position, then remove plug from outlet.

Index

StairMaster Gauntlet and SM5 - Commercial StepMill Product Details

Recommended Tools

Preventative Maintenance

Major Components

Mechanical Adjustments

- **Alternator Brush Replacement**
- **Alternator Removal / Replacement**
- **Transmission Removal / Replacement**
- **Step Chain Removal / Replacement**
- **Upper / Lower Sprocket Removal / Replacement**

Consoles

Electrical Troubleshooting

- **Power Trace**
- **No Resistance**
- **Choppy Resistance**
- **Relay Board Tests**
- **Other Key Points**
- **Contact Heart Rate Test**

SM3 – Light Commercial / Residential StepMill Product Detail

Gauntlet

Technical Specs

Product Dimensions	58" L x 34" W x 89" H (147cm L x 86cm W x 226cm H)
Product Weight	328 lbs (149 kg)
Max User Weight	350 lbs (159 kg)
Power Requirements	Input Voltage 100-240 VAC 50/60 Hz 100 VA
Display	Three choices of displays. 1) 10” Touch Screen Console with integrated TV Tuner (TSE-1) and 2) 10” Touch Screen Console (TS-1) and 3) Backlit LCD Console (D-1).
TV Option	15.6" digital television with HD capabilities (SMV-1)
Workouts	Landmark Challenge Program where users climb well known landmarks from around the world. Standard programs that members are familiar with are also included. *Landmark Challenge feature available on the TSE-1/TS-1 Console Only
Warm Bar Functions	Contact Heart Rate sensors and automatic stop button
Fitness Tests	Multi-stage Fit Test, CPAT Fire Fit Test and WFI StepMill® Test
Drive System	Electronically controlled alternator with chain drive precisely controls the stair speed
Step Action	Revolving staircase with eight steps, 8" (20cm) high, 9” (23cm) deep and 22" (56cm) wide
Step Rate	24 to 162 steps/minute
Heart Rate Monitoring	Polar® compatible wireless; contact sensors

US Commercial Warranty

Frame	15 Years
Parts	3 Years
Labor	1 Year

Note: Warranty terms are for U.S. only and vary by region. Contact the distributor in your country and region.

Last revised 10/5/15

SM5

Technical Specs

Product Dimensions	58" L x 34" W x 89" H (147cm L x 86cm W x 226cm H)
Product Weight	343 lbs (156 kg)
Max User Weight	350 lbs (159 kg)
Power Requirements	Input Voltage 100-240 VAC 50/60 Hz 100 VA
Display	Three choices of displays. 1) 10” Touch Screen Console with integrated TV Tuner (TSE-1) and 2) 10” Touch Screen Console (TS-1) and 3) Backlit LCD Console (D-1).
Workouts	15.6" digital television with HD capabilities (SMV-1)
Fitness Tests	Landmark Challenge Program where users climb well known landmarks from around the world. Standard programs that members are familiar with are also included. *Landmark Challenge feature available on the TSE-1/TS-1 Console Only
Drive System	Electronically controlled alternator with chain drive precisely controls the stair speed
Step Action	Revolving staircase with eight steps, 8" (20cm) high, 9” (23cm) deep and 22" (56cm) wide

US Commercial Warranty

Frame	15 Years
Mechanical Parts	3 Years
Wear items/Electronics	1 Year

Note: Warranty terms are for U.S. only and vary by region. Contact the distributor in your country and region.

Last revised 10/5/15

Tools

# Units	Tool	Suggested Manufacturer	Minimum Specifications
1	Multi-meter	Various	Digital, Continuity,
1	Socket Set, SAE	Various	1/4" - 5/8"
1	Socket Set, Metric	Various	4mm - 21mm
1	Socket driver	Various	
1	Open end wrenches, SAE	Various	1/4" - 3/4"
1	Open end wrenches, Metric	Various	4mm - 17mm
1	Hex Bit Socket Set, SAE	Various	5/64 - 3/8
1	Hex Bit Socket Set, Metric	Various	4mm - 14mm
1	Adjustable Wrench	Various	
1	Torque Wrench	Various	
1	Torque Wrench	Various	
1+	Screwdriver Set, Phillips	Various	
1+	Screwdriver Set, Flat	Various	
1	Tape Measure	Various	
1	Ball Pene Hammer	Various	10 oz
1+	Rubber Mallet	Various	
1	USB - Flash Drive	Various	1 GB
4	Motorcycle straps, adjustable	Various	
1	Loctite 680	Various	
1	1’ Jumper wire w/ alligator clips	Various	
50	zip ties	Various	4'
50	zip ties	Various	8'

Preventative Maintenance

Cleaning

1. Do not use glass cleaners or any other household cleaners on the console. Clean the console daily with a water dampened cloth and wipe dry after cleaning.
2. Clean the exterior of the machine daily using soap and water or a diluted, non-mineral based household cleaner such as Fantastik, or Simple Green.

Note: The safety and performance of this product can be maintained only if it is inspected regularly for damage and wear. Pay particular attention to the components most susceptible to wear such as steps and lower side covers. Remove any damaged machine from service and replace damaged components immediately.

Inspection

1. Inspect the frame for any rust, bubbling, or paint chips during the daily cleaning. The salt in perspiration can damage the unpainted surfaces. Repair the damaged area with a touch-up paint kit from customer service.

Maintenance Schedule

General Maintenance	Daily	Weekly	Monthly	Comments
Check Safety & Warning Labels	X			
Spot Check Step Chains	X			
Alternator Belt Tension			X	Tension to 40-54 lbs*inch
Lubrication				
Drive Chains			X (or every 300 hours)	30W Motor Oil
Bearing Plate			X	Multi-Purpose Grease/White Lithium
Cleaning				
Clean Console	X			Clean with a water dampened cloth & wipe dry after cleaning
Clean Side Covers	X			Clean exterior with soap & water, or diluted household cleaner

Parts and Service

Regular and scheduled maintenance will prolong the life of your equipment. Only use genuine StairMaster replacement parts.

External Power Supply

The external power supply is supplied with the unit and plugs into a standard 115 volt, 15 amp outlet, or a 220-240 volt 50Hz, 10 amp outlet. All major voltage plugs are available. The power inlet is located on the underside of the machine.

Major Components

Step Hardware

Composite plastic step with a rubber tread built into step top.

The step top and kick plate are held together and to the step chains by step hinges, threaded step shafts, nylon spacers, bearings, washers, and bolts.

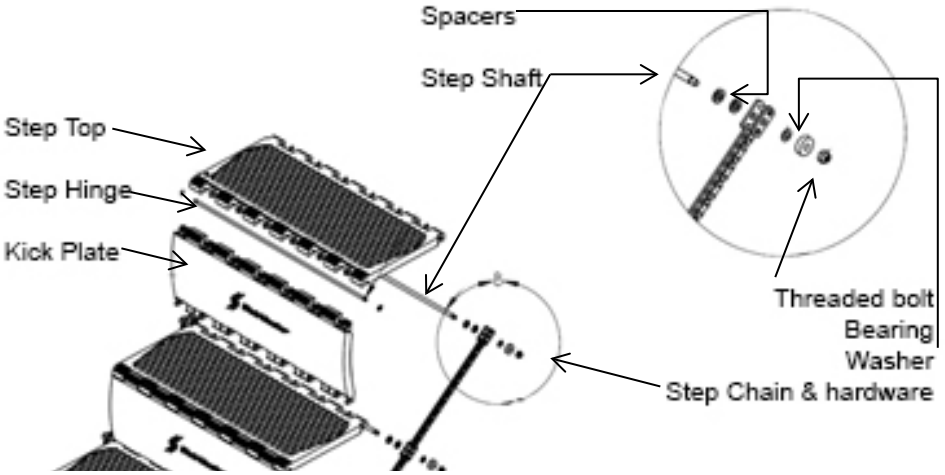

Drive System

The upper and lower sprockets are held to the chassis of the machine by pillow block bearings and connect the left-side and right-side step chains.

Pillow blocks can be adjusted on the frame to ensure alignment from upper to lower sprockets and for tensioning the step chains.

As the steps rotate, bearings in the step shaft hardware ride down the rails on bearing plates. These bearing plates need to be greased with white lithium, or marine grease.

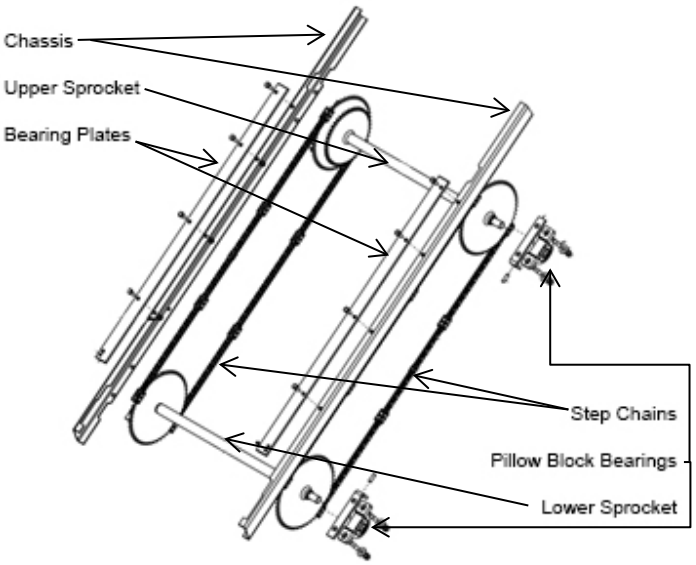

Major Components

Drive System

Side view of StepMill with covers removed shows the upper sprocket connection to the transmission via drive chain. The transmission is in place to ensure gearing up/down is handled appropriately during a user workout.

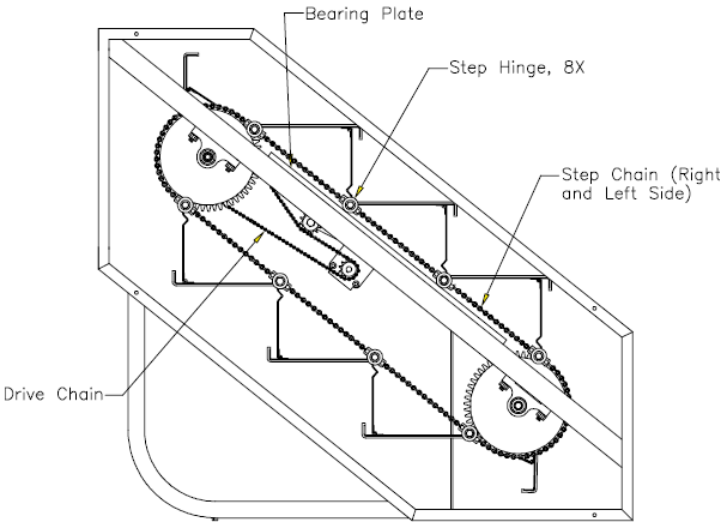

The upper sprocket has an inner sprocket that connects the drive chain to the transmission sprocket. There is an idler arm and sprocket on the transmission to assist with keeping tension on the drive chain.

Ensure the idler arm moves with the chain and that the bolt that connects it to the transmission is not over tensioned.

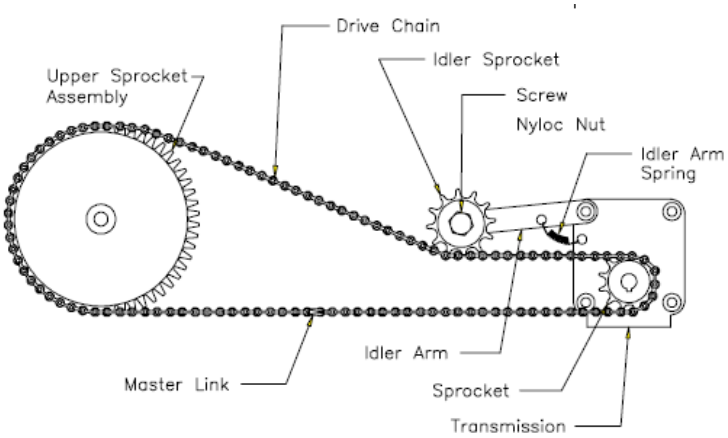

Resistance System

Resistance is applied to the steps of the machine by use of an alternator. 12VDC power from the lower board is fed into the alternator to control the amount of resistance it applies.

The resistance system (alternator) connects the gearing system, or transmission of the machine via poly-V belt.

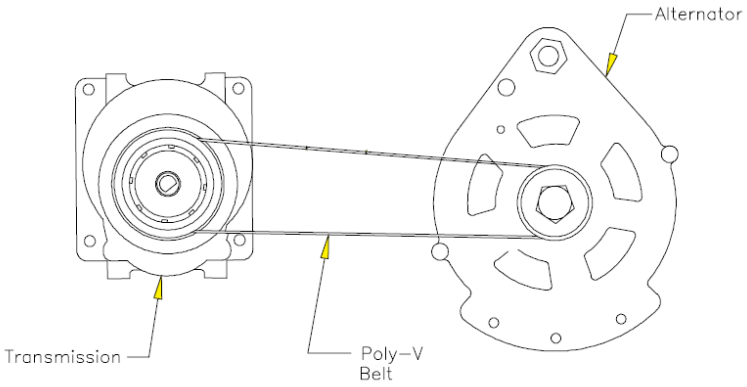

Major Components

Resistance System

The alternator and transmission connect to the chassis of StepMill as shown.

The alternator's connection pivots allowing the poly-V belt to be tensioned. Tension to 40-54 lbs*inch, or 1/4 of a turn (90 degrees) of deflection. Ensure the belt is not too tight, or damage to the alternator bearings or transmission housing can occur.

The inner pulley of the transmission has a set screw so the poly-V belt can be aligned with the alternator pulley.

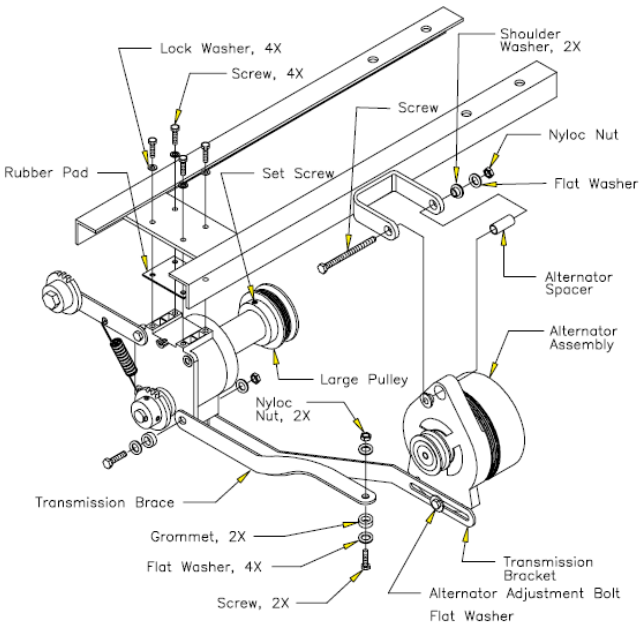

Wiring connections to Alternator:

W5: White-B+ Alt. output voltage
W3: Brown Field, Alternator Control Current
W6: Black Ground, Alternator return
W4: Blue Tach, velocity signal to console

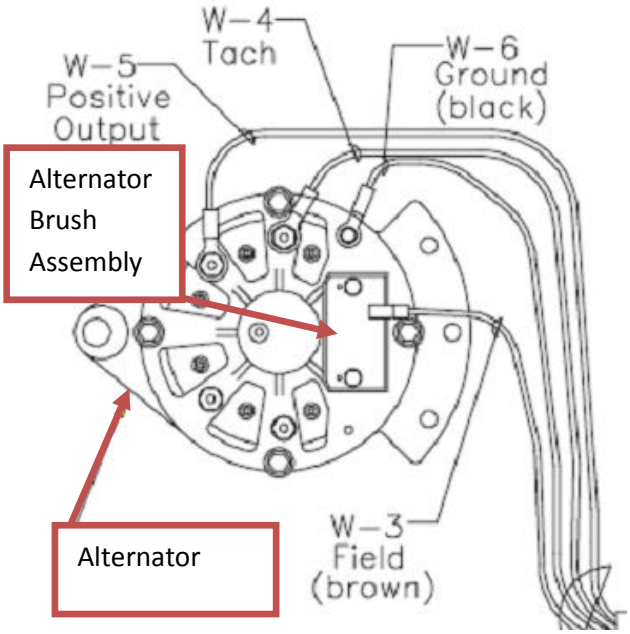

Major Components

Power System

12VDC power comes into the lower board at the J2 connection. The console's J1 connection on the board is where the main data cable plugs in.

Wires from the J3 location connect to the appropriate posts on the alternator.

When the machine is plugged in and on, the Power and Relay LEDs should be lit. Once the alternator senses motion, i.e. a user is on the machine, the Field LED will become lit.

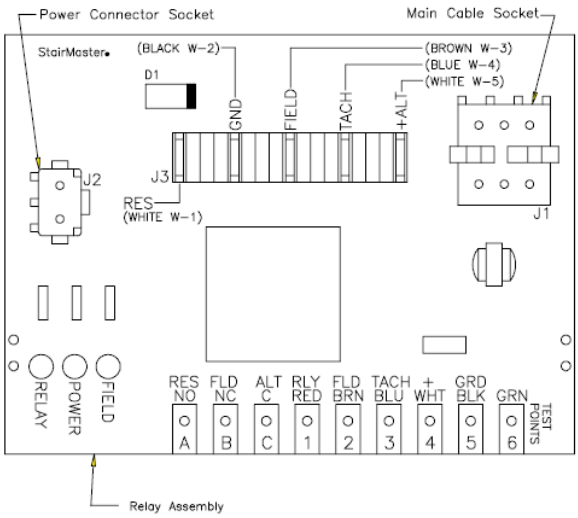

The lower board mounts to a plate that also houses the 0.5 ohm resistor.

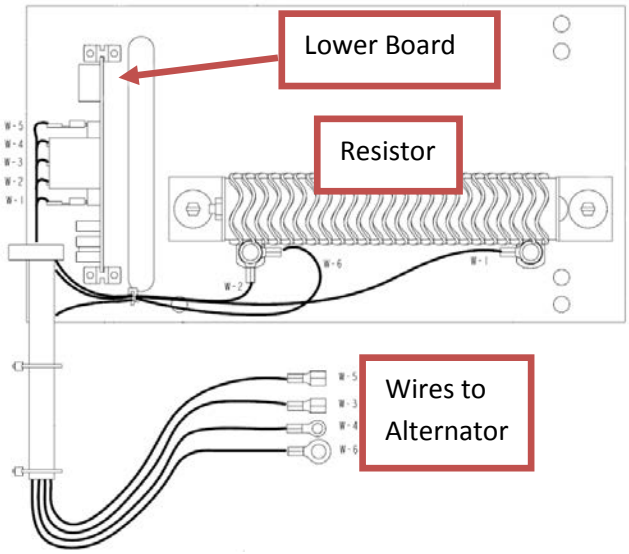

Major Components

Power System

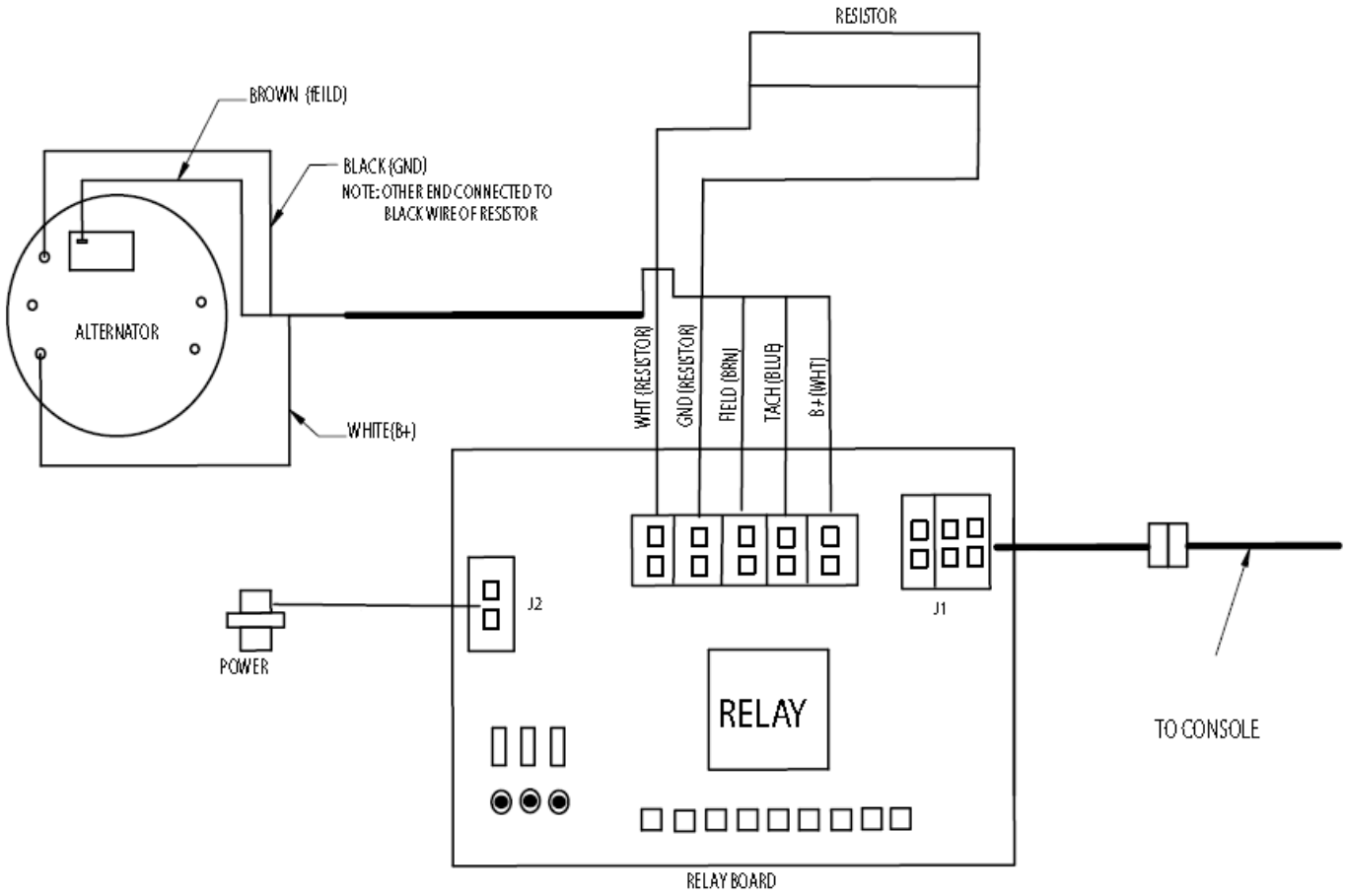

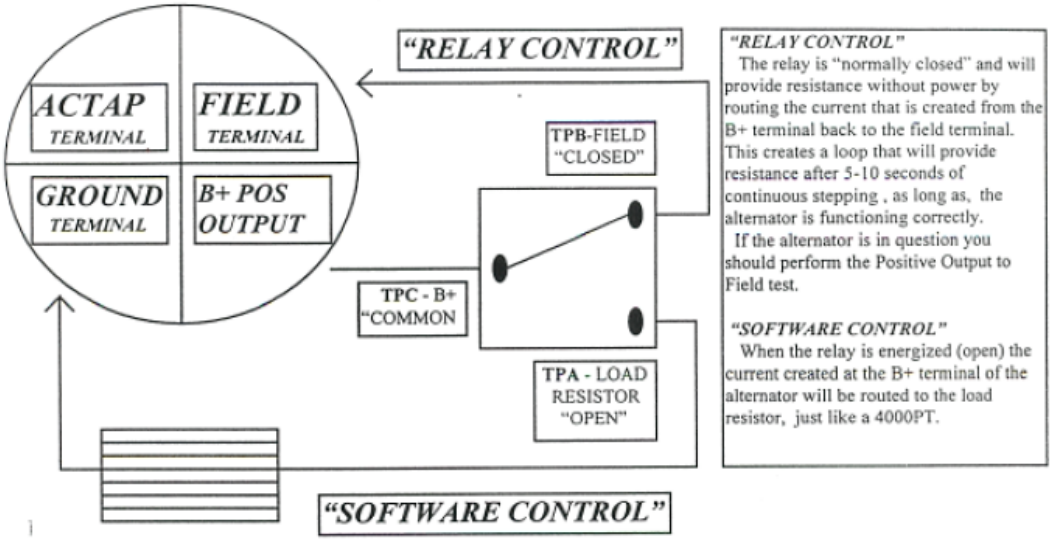

Last revised 10/5/15

Mechanical Adjustments

1. Remove alternator belt and inspect for cracks, fraying or any other unusual or excessive wear.

2. Spin alternator pulley to check bearings.

3. Inspect alternator pulley for wear.

4. Check that the transmission pulley set screw is tightened on the flat side of the shaft (check alternator/transmission pulley alignment).

5. Remove the drive chain and inspect it for frozen links.

6. Spin transmission drive sprocket input one complete revolution. The transmission pulley output should turn 19 times.

7. Check that the transmission drive sprocket set screw is tight.

8. Visually inspect both upper and lower sprocket assemblies including pillow block bearings for signs of unusual or excessive wear.

9. Check side to side alignment of sprocket assemblies by measuring from the outside face of each sprocket to the outside edge of the corresponding bearing rail. Measurement on sprockets should be 1 11/16" left justified.

10. Inspect step shafts and bearings in each step assembly for wear and lubricate step shafts and bearings rails as necessary (Refer to the recommended general maintenance schedule or owner's manual).

11. Inspect hinged portion of all step assemblies for wear and lubricate with 30 WT motor oil or light bearing grease.

Mechanical Adjustments

Alternator Brush Replacement

1. Remove user-right side cover
2. Remove brown wire from W3 (FLD BRN) post of alternator.
3. Loosen ¼" bolts on W3 post, or alternator brush assembly
4. Verify brush length and quality. We recommend replacing brushes that are ¼" or less.

Alternator Replacement

1. Remove side covers.
2. (Optional) Remove a step shaft, allowing top-down access for transmission removal.
3. Remove poly-V belt from inner transmission and alternator pulleys.
4. Remove the transmission bracket, between transmission and alternator, from the alternator body.
5. Remove W3 (brown), W4 (blue), W5 (white), and W6 (black) wires from posts of the alternator.
6. Remove the Nyloc nut, screw, spacer and hardware that mount the alternator onto the chassis of the machine.
7. Mount the new alternator onto the pivot assembly.
8. Reconnect the transmission bracket to the alternator body.
9. Reconnect W3 (brown), W4 (blue), W5 (white), and W6 (black) wires to the corresponding posts of the alternator.
10. Reconnect the poly-V belt between the transmission and alternator and ensure proper alignment and tension.
11. Once proper belt tension is set tighten the alternator adjustment bolt on the transmission bracket of the alternator, and pivot assembly hardware.
12. Replace side covers.

Transmission Replacement

1. Remove side covers.
2. Remove drive chain master link and chain from transmission / upper sprocket.
3. (Optional) Remove a step shaft, allowing top-down access for transmission removal.
4. Remove poly-V belt from inner transmission and alternator pulleys
5. Remove the transmission brace from the transmission body, leaving the other end connected to the machine chassis.
6. Remove the transmission bracket, between transmission and alternator, from the transmission body.
7. Loosen the 4 bolts that mount the transmission to the chassis of the machine. Take note of the rubber pad that sits between the transmission and machine.
8. Remove transmission and remove the sprocket, idler arm assembly, and inner pulley and key for use on the new transmission.
9. Assemble transmission parts from Step 7 onto new/replacement transmission.
10. Bolt new transmission onto the chassis of the machine, ensuring to replace the rubber pad.
11. Reconnect the transmission bracket from the alternator and the brace from the chassis.
12. Align the inner transmission pulley, so it is in alignment with the alternator pulley, and tighten the set screw.
13. Reconnect the poly-V belt between the transmission and alternator and ensure proper alignment and tension.
14. Reconnect drive chain and master link.
15. Replace side covers.

Mechanical Adjustments

Step Chain replacement

1. Remove side covers.
2. Remove drive chain master link and chain from transmission / upper sprocket.
3. Loosen 9/16” nuts on all 4 pillow blocks from chassis.
4. Count threads on pillow block adjustment screws, and loosen on all pillow block bearings/step chains.
5. On one side of the machine, remove step chain master link and break chain.
6. Connect new chain to old chain with master link.
7. Remove step shaft bolt and hardware on one side of the machine.
8. Remove step shafts from the old chain and reconnect to the new chain, reassembling the spacers, bearings, washer and nut one shaft at a time per side.
9. Once the 8 step shafts have been installed into the new chain, reconnect the new step chain with the master link.
10. Once one new side’s step chain is on, repeat steps for other side.
11. Replace drive chain and master link
12. Use pillow block adjustment screws to ensure upper and lower sprockets are in alignment and tension on the new step chains is appropriate. Tighten 9/16” bolts to chassis.
13. Tighten 9/16” bolts on the pillow blocks to chassis.
14. Replace side covers.

Upper/Lower Sprocket Replacement

1. Prepare a clean work area
2. Remove side covers
3. Remove console
4. Tip machine forward, so the console mast is resting on the ground.
5. Remove drive chain master link and chain from transmission / upper sprocket.
6. With an assistant, loosen and remove 9/16” nuts on upper sprocket pillow blocks until the pillow block bearing is removed from the chassis and the upper sprocket is no longer connected.
7. Remove upper sprocket from machine.
8. Remove pillow block bearings from the upper sprocket and fit to the new sprocket using the set screws on the outer collar. If pillow block bearings are bad, replace.
9. Lower the new upper sprocket into the teeth of the left and right side step chains. Ensure the inner sprocket is on the proper side and corresponds with the transmission sprocket. Verify alignment and placement within the teeth of the chains.
10. Replace pillow block bearings to chassis of machine and snug up the 9/16” bolts, but do not fully tighten.
11. Rotate steps to ensure there is no binding and stairs rotate smoothly.
12. Use pillow block adjustment screws to ensure upper and lower sprockets are in alignment and tension on the new step chains is appropriate.
13. Tighten 9/16” bolts on the pillow blocks to chassis.
14. Replace side covers.
15. For lower sprocket replacement, omit step 4.

Consoles

7000 PT / 4400 / 4600

C5 Console

- Red LED Readout
- Non-replacable overlay
- Repair/Exchange through National Gym Supply

C40 Console – Blue Faced Overlay

- Blue LCD Readout
- **Console PN#**: 055-0034
- **Replacable overlay: PN#** - SM27780-001, SM27790, SM27779
- **Display Board PN#:** SM40070-001
- **Process Board PN#:** SM27130
- Menu map available

C40 Console – Gray Faced Overlay

- Blue LCD Readout
- **Console PN#:** 055-0034
- **Replacable overlay PN#:** SM25673, SM27790, SM27779
- **Display Board PN#:** SM40070-001
- **Process Board PN#:** SM27130
- Menu map available

StairMaster

SM916 / SC916

C51/C52 LCD Console

- Blue LCD Readout
- **Console PN#:** 003-3625
- **Replacable overlay PN#:** SM40468
- Menu map available

SM5 / SC5

D1 LCD Console

- Blue LCD Readout
- **Console PN#:** 050-0035
- **Replacable overlay PN#:** 050-0287
- USB port for software upload
- Menu map available

TS-1 / TSE-1 Console

- **Touchscreen (TS-1) PN#:** 050-0129
- **TV Optional (TSE-1) PN#:** 050-0034
- USB port for software upload
- Ipod connector for use with iDevice
- Menu map available

Last revised 10/5/15

Gauntlet / Freeclimber

D1 LCD Console (Black)

- Blue LCD Readout
- **Console PN#:** 050-0035-35
- **Replacable overlay PN#:** 050-0287
- USB port for software upload
- Menu map available

TS-1 / TSE-1 Console (Black)

- **Touchscreen (TS-1) PN#:** 050-0129-35
- **TV Optional (TSE-1) PN#:** 050-0034-35
- USB port for software upload
- Menu map available

Last revised 10/5/15

Electrical Troubleshooting

Power Trace

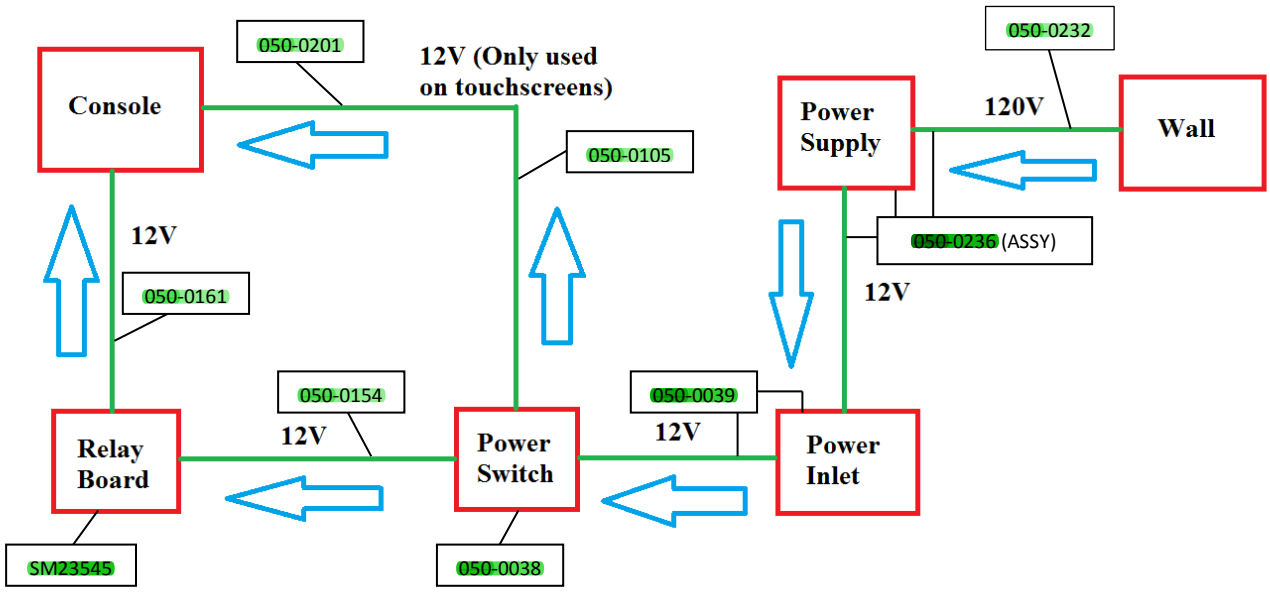

Test voltage at any point green touches red

1. **No Resistance When Stepping**

   Remove the right side panel to view the three LED's on the lower PCB board.

   Begin moving the staircase.

   If all three of the red LEDs on the relay board are illuminated but there is no resistance, inspect the alternator brushes (SM24557) if worn or the alternator (SM22900).

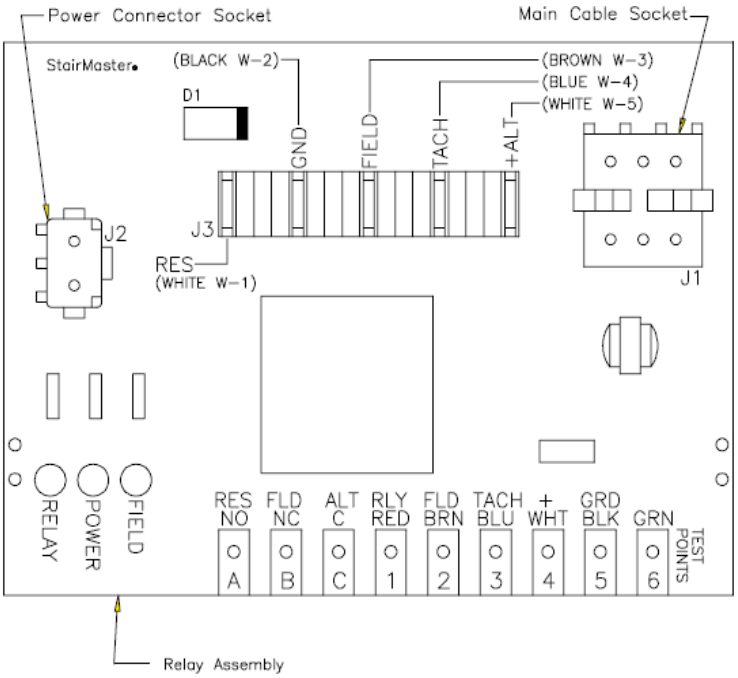

2. **No Resistance and No Field Light**

- Begin moving the staircase.
- Staircase freewheels and field LED does not light.
- Perform tach test by entering diagnostics.
- If there is no tach signal sensed on console.
    - Check for .6 to .7 volts AC at the W-4 (Tach) terminal of the alternator.
    - If no voltage, remove the blue tach wire from the alternator, while staircase is moving.
        - Touch the tach wire to the field terminal.
        - If the field LED lights, replace the alternator.
    - If the voltage checks good, remove the blue connector from the W-4 (Tach) terminal of the alternator. Lightly scrape the connector and re-install. Re-check.
- If still bad, replace the console.

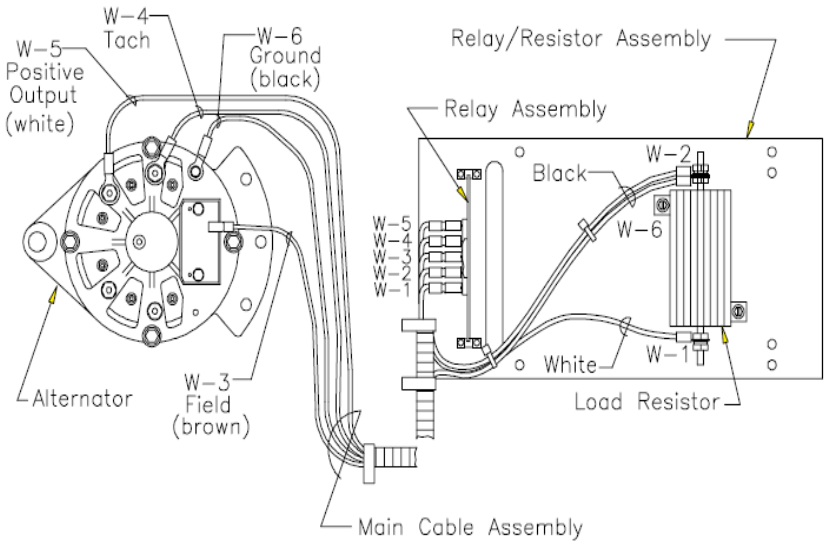

3. Staircase has resistance but is choppy during exercise.

• Inspect Main Cable for Corrosion at all connections.

• Check Load Resistor for a reading of .5 to.6 Ohms. If lower than .5 ohms, then replace the load resistor (SM24989).

• If load resistor checks good, replace the alternator brushes (SM24557) or alternator (SM22900).

4. Relay board tests.

- Disconnect the main cable from relay board J1 terminal.
- With power on, place jumper across GND/BLK and RLY/RED test points.
    - Relay LED should light. If not, replace lower PCB board (SM23545).
- With power on, place jumper across +/WHT and FLD/BRN test points.
    - Field LED should light. If not, replace lower PCB board (SM23545).
- Disconnect the black W-2 ground wire. With power on now, place a jumper on the +/WHT test point and with the other end touch the ALT/C test point, then jump the +/WHT to the FLD/NC test point, and then jump the =/WHT to the RES/NO test point. Once the test is completed, re-attach the black W-2 ground wire and the J-1 main cable socket which was removed at the beginning of the relay board test .
    - Field LED should light. If not, replace lower PCB board (SM23545).

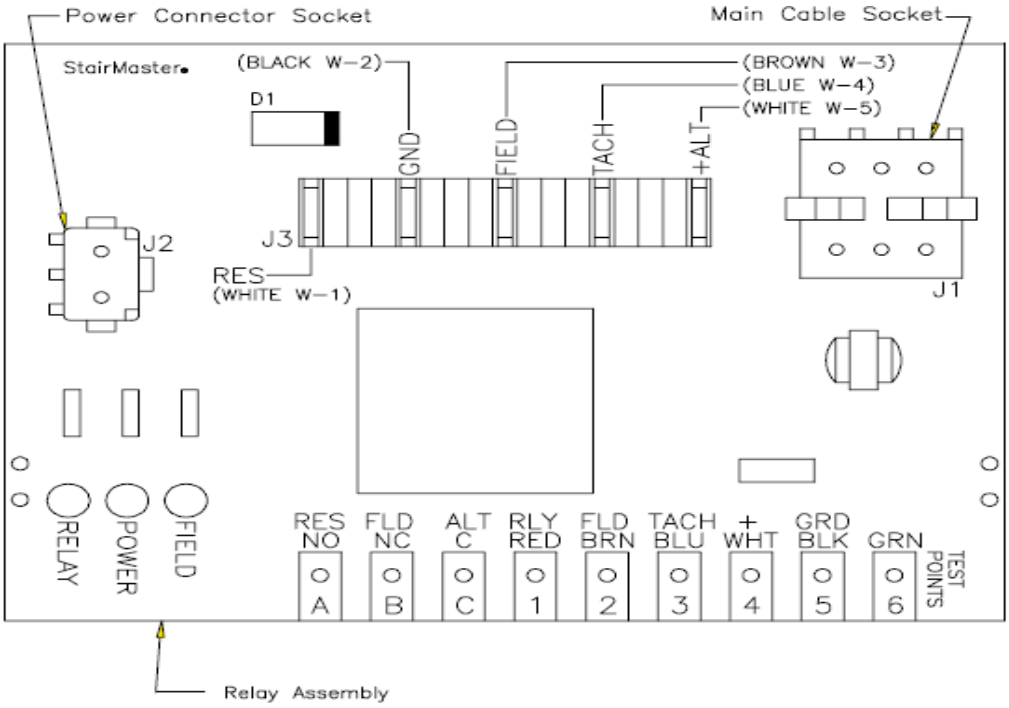

5. Other Key Points

- Remember that the only signal that will prevent the field LED from lighting on the relay board is the tach signal from the blue wire. The console must receive an rpm signal to activate the field current to the alternator that is PWM controlled.
- If you suspect the alternator, disconnect all the wires and check the resistance across the field terminal and the alternator housing; a typical Alternator should read around 4 Ohms or higher.
- The Field LED on the relay board will flicker at higher speed levels. This is the PWM signal from the console to the field terminal of the alternator to control resistance / speed. If you experience full resistance through all levels and the field light doesn't flicker; replace the console.
- To verify that the load resistor is working correctly, you must ohm the resistor out using your multi meter. The load resistor must read above .5 ohms. If the resistor reads anything less than .5 ohms, then replace the load resistor (SM24989).
- Always perform mechanical troubleshooting in addition to electrical trouble shooting for resistance problems.

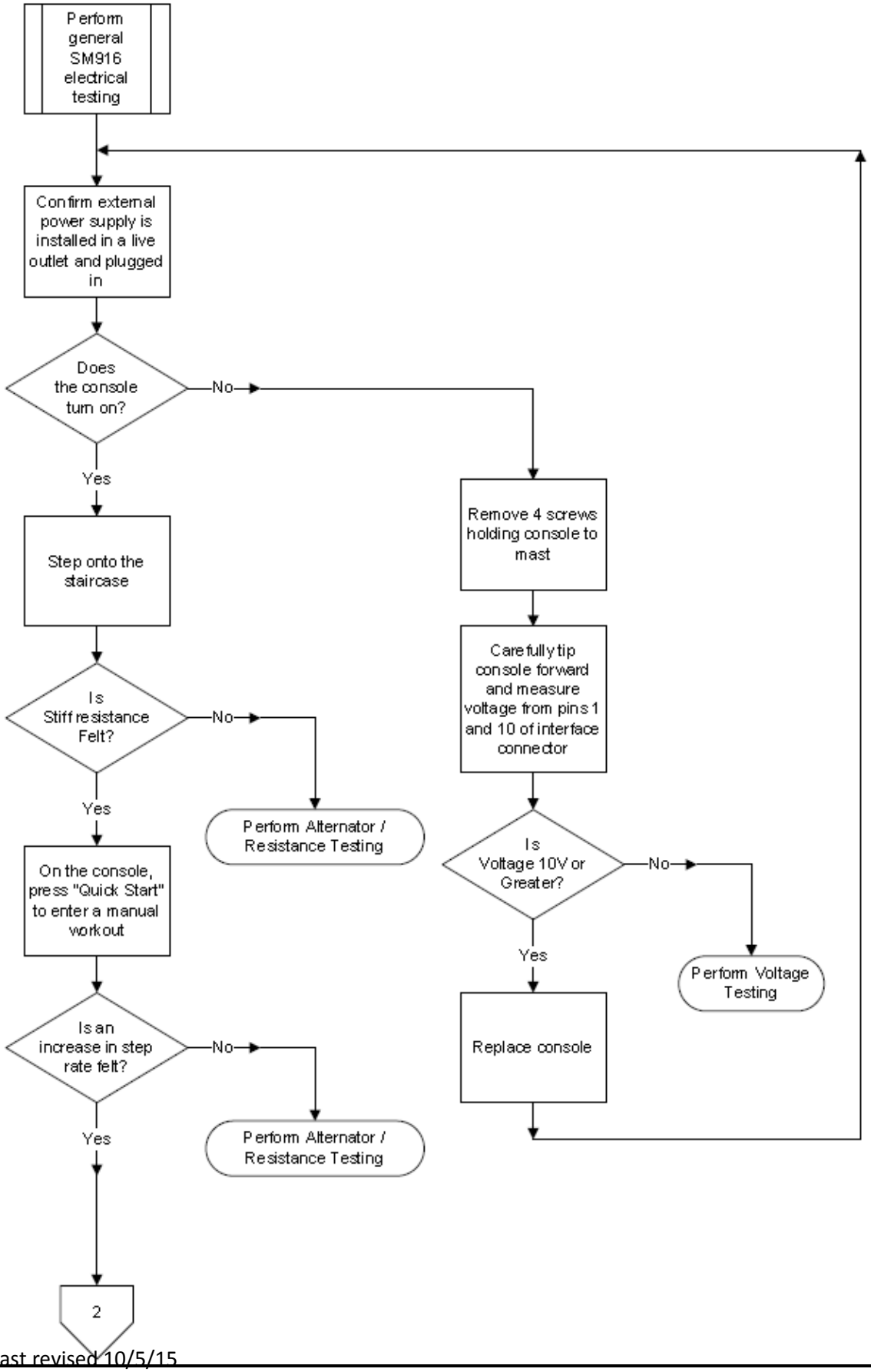
Perform general SM916 electrical testing
Confirm external power supply is installed in a live outlet and plugged in
Does the console turn on?
No
Yes
Remove 4 screws holding console to mast
Carefully tip console forward and measure voltage from pins 1 and 10 of interface connector
Is Voltage 10V or Greater?
No
Perform Voltage Testing
Yes
Replace console
Step onto the staircase
Is Stiff resistance Felt?
No
Perform Alternator / Resistance Testing
Yes
On the console, press "Quick Start" to enter a manual workout
Is an increase in step rate felt?
No
Perform Alternator / Resistance Testing
Yes
2

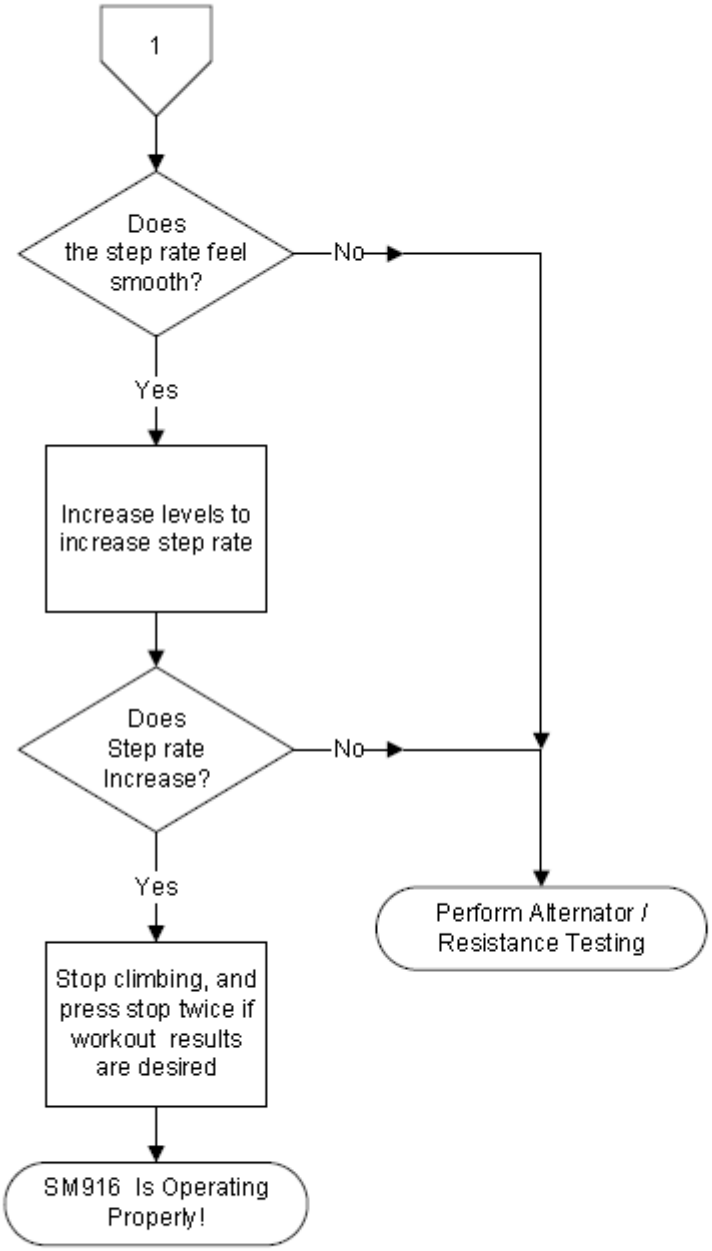
1
Does the step rate feel smooth?
No
Yes
Increase levels to increase step rate
Does Step rate Increase?
No
Yes
Perform Alternator / Resistance Testing
Stop climbing, and press stop twice if workout results are desired
SM916 Is Operating Properly!

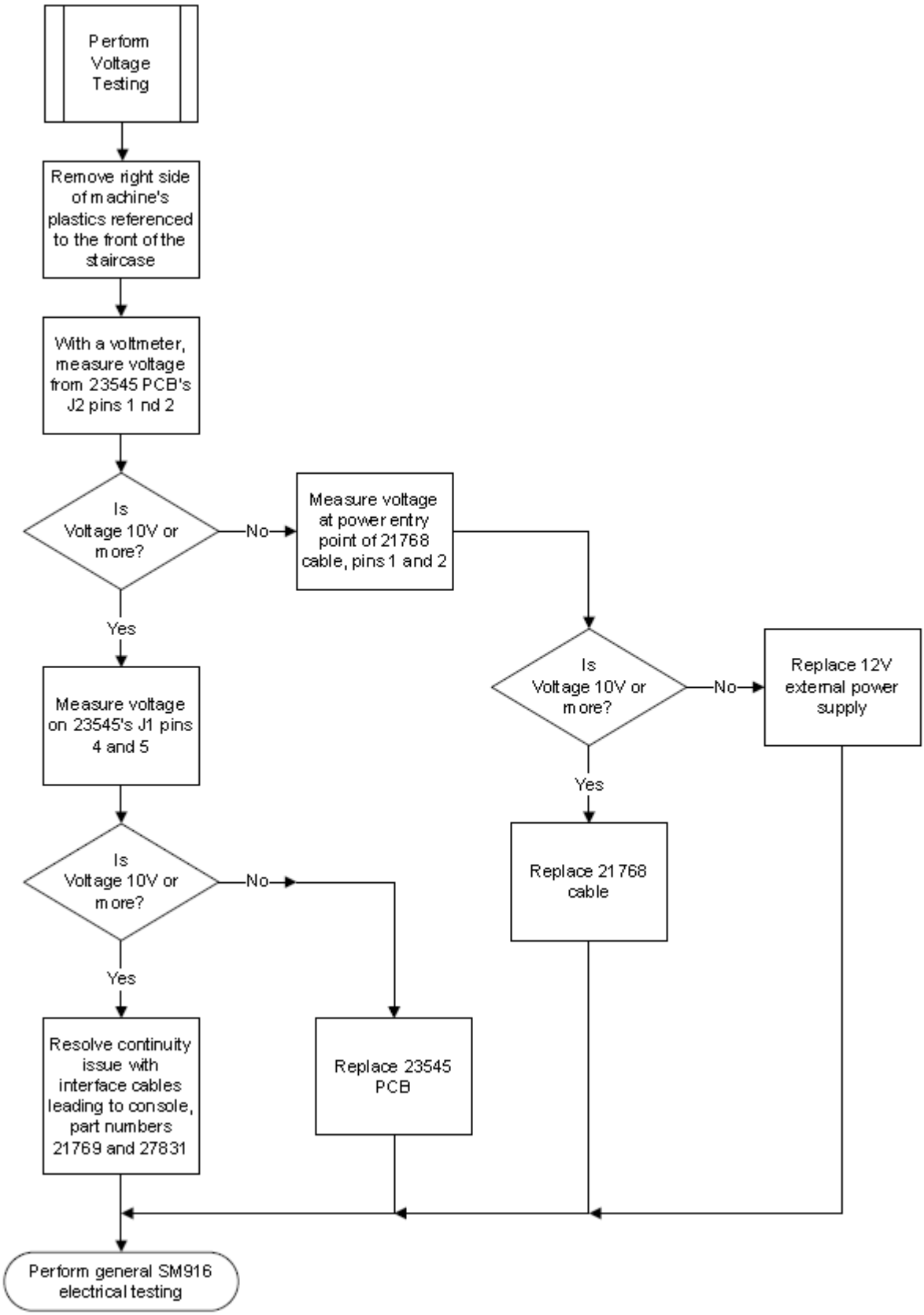
Perform Voltage Testing
Remove right side of machine's plastics referenced to the front of the staircase
With a voltmeter, measure voltage from 23545 PCB's J2 pins 1 nd 2
Is Voltage 10V or more?
No
Measure voltage at power entry point of 21768 cable, pins 1 and 2
Yes
Measure voltage on 23545's J1 pins 4 and 5
Is Voltage 10V or more?
No
Yes
Is Voltage 10V or more?
No
Replace 12V external power supply
Yes
Replace 21768 cable
Resolve continuity issue with interface cables leading to console, part numbers 21769 and 27831
Replace 23545 PCB
Perform general SM916 electrical testing

Alternator / Resistance Testing

The colored connections to the alternator are as follows:

White-B+	Alternator output voltage
Brown	Field, Alternator Control Current
Black	Ground, Alternator return
Blue	Tachometer, velocity signal back to console

Resistance over gravity is performed by the alternator in the StepMill. When the console senses a user with staircase movement, the console should be enabling full field current to the alternator. Field current is provided from the external power supply, through the console, into the lower board and wired into the alternator's field terminal. Under this condition, the console should also be driving the lower board's J1 pin 1 low, switching the .5ohm load resistor onto the alternator's B+.

The alternator's B+ should rise as a result of field current, but its voltage will depend on the weight of the user and resulting velocity. Resistance is achieved by the oppositions of internal magnetic fields when field current is applied. The user's weight will affect the alternator's RPM under this condition, and under full field current conditions the voltage is not controlled. But, with the large gear ratio and full field current applied, the resistance should be at maximum, and the step rate should be at a minimum.

Once a user starts a workout, the console controls the alternator's field current attempting to maintain the desired step rate. This signal is Pulse Width Modulated (PWM) from 0V to 12V, the level of the loaded external supply. If the step rate is fast, the console will deliver field current longer, if the step rate is slow, it will deliver less field current.

The only situation where no field current would be present during a workout is if a very light weight person was attempting to achieve a step rate that could not be achieved by their weight overcoming the frictional resistance of the system. In this case, the console would keep field current off, or no induced resistance.

During workouts the alternator's B+ increases as a function of speed and user weight. For high level workouts with heavy weight users, B+ levels of 20V could be witnessed.

Power entry is at the bottom of the unit. The 12V 2.5A supply enters via the main power harness, and enters into the PCB via J2. LED2 indicates power is present, but 12V should still be confirmed with a volt meter. Power and control interface to the console is provided at location J1. 12V is provided up to the console at J1 pin 4, and GND pin 5.

In addition to alternator field current, the console controls the loading of the alternator's B+ with the .5ohm resistor which is switched by the lower board's relay. When the console detects a user has stepped on the staircase, it immediately applies full field current, and turns on the power relay to load B+ with .5ohm. LED1 is an indicator the console is attempting to close the relay, but this should be confirmed with a VOM.

If no resistance is felt, confirm 10V to 12V is being applied to the alternator's field. This should always be present once a user is detected, and before a workout has begun. Confirm the additional load is being switched also, which is controlled by a low voltage on J1 pin 1. The operation of the power relay can be confirmed by unplugging the unit, and removing the console connection at J1. Install external power again, and an ohmmeter should show continuity from B+ to field on the 23545's terminal strip.

Contact Heart Rate Testing - Gauntlet

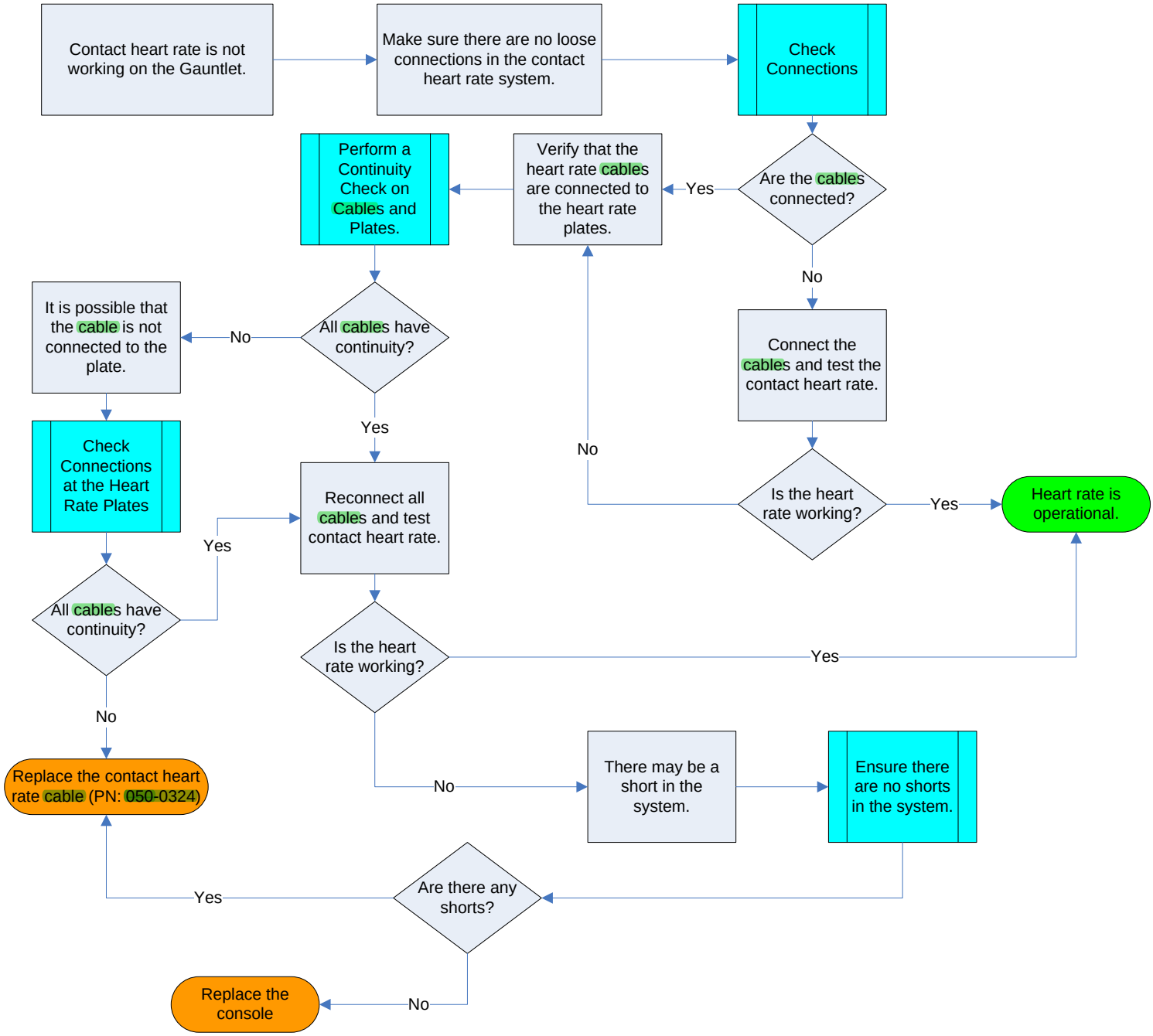

Last revised 10/5/15

SM3 – Light Commercial / Residential

Technical Specs

Product Dimensions	46" L x 29" W x 73" H (117cm x 74cm x 185cm)
Product Weight	227 lbs (103 kg)
Power Requirements	Input Voltage 100-240 VAC 5060 Hz 100 VA
Display	Backlit LCD Console
Workouts	Standard console programs
Drive System	Electronically controlled brake generator and drive chain precisely controls the stair speed allowing users to exercise smoothly within their comfort zones
Step Action	Revolving staircase with six, 6” inch steps
Step Surface	9"x17"

U.S. Commercial Warranty

User Environment	**Residential**	**Light Commercial**
Frame	Lifetime	10 Years
Mechanical	5 Years	2 Years
Electronics	2 Years	1 Year
Wear Items	1 Year	1 Year
Labor	1 Year	1 Year

Last revised 10/5/15

SM3

LCD Console

- Blue LCD Readout
- **Console PN#:** 723-0229
- Menu map available

Button Selection

During console input if any of the following keys are pushed, then the resulting action will occur:
QUICK START.....Navigate to QUICK START MODE
PROGRAMS.....Navigate to PROGRAMS MODE
ENTER.....Confirm the information or value selected
UP/DOWN.....Increases/decreases value
STOP.....Navigate to IDLE MODE. First press clears information, second press navigates to IDLE MODE
CLEAR/RESET.....First press clears information; second press navigates to IDLE MODE

If there is no value input and confirmation for 1 minute, then console returns to IDLE MODE

Sleep Mode

The console will enter SLEEP mode after 10 minutes of non-activity. In SLEEP mode there will be no display and the back light will be off. End SLEEP MODE by pressing any console button. When exiting SLEEP MODE, the machine will be in IDLE mode.

CORPORATE HEADQUARTERS

Core Health & Fitness

4400 NE 77th Avenue, Suite 300

Vancouver, WA 98662

(888) 678-2476

For further support on StairMaster products, please visit:

http://support.stairmaster.com

Last revised 10/5/15